STAHLWILLE angle-controlled torque wrenches.
For absolute accuracy.

For high-accuracy applications – Category A bolted connections, for example – just checking the torque is not enough. As well as the torque, it is crucial to tighten to the correct tightening angle

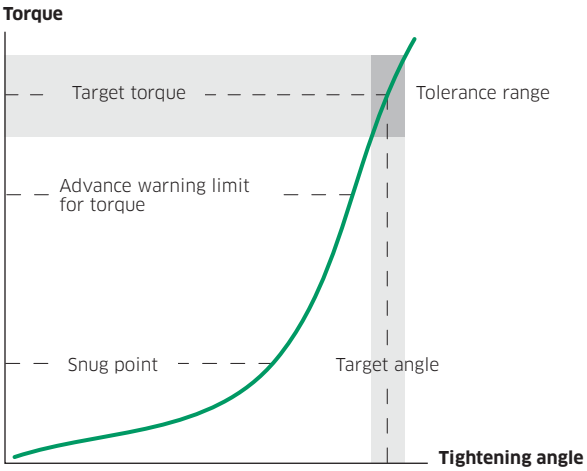



→ 202

MANOSKOP® **730D**
+ Angle Module 7395-1



→ 206

MANOSKOP® **714**



→ 210

Sensotork® **713R/712R**

The torque reading specifies how much force was applied to tighten a fastener. For many applications, this is perfectly good enough. However, in certain cases, the additional measure of accuracy is an essential requirement. The tightening force that is generated between the workpieces in a bolted joint has to be exactly adhered to: if the force is too great, there is a risk of breakage. If it is too low, on the other hand, the connection will not be firm enough and may lead to failure in the assembly under normal operating conditions. Since the tightening force is dependent on the tightening torque and the angle, measuring equipment that can measure both quantities exactly is required. For applications of this kind, STAHLWILLE has precisely the solutions industry needs.

- **Accurate control:** Uncertainty is reduced to a minimum to guarantee accurate readings.
- **Higher quality bolted connections:** Including the tightening angle as the second measured quantity makes the bolted joint even more secure.
- **Perfect procedures:** Easily readable, unmistakeable displays and automatic switch-over to angle-controlled measurement once the target tightening torque has been reached – key features in efficient, safe work practice.
- **Excellent economy:** Thanks to the considerably extended measuring range, every angle-controlled torque wrench can replace as many as four mechanical torque wrenches (two indicating and two clicking), which simultaneously reduces the costs of maintenance, calibration and adjustment. All these models are suitable for clockwise and anticlockwise tightening.
- **Better monitoring:** All our angle-controlled torque wrenches have a logging function. Using the corresponding software (in some cases this is an optional extra), it is possible to read out programmed, stored readings and archive them on the PC – for example by the serial number of the tool, date and timestamp of the tightening operation, target torque and angle and the torques and angles actually recorded.



MANOSKOP® 730D
Electromechanical torque wrench



Benefits at a glance:

- Indicating and click-type
- Displays the torque actually applied after the wrench cuts out. In this way, the user has the opportunity to optimise his or her working methods.
- Units of measurement: N·m / ft·lb / in·lb
- Automatic keypad lock
- Display also works for anticlockwise torque
- Angle-controlled measurement without a reference arm using a supplementary module
- Overload protection by means of acoustic and visual signals
- Automatic compensation to achieve correct tightening torque even if a changed extension is entered
- Different tolerance limits can be set for each joint
- Visual red and green signals in the display confirm the status of the joint
- Additional security for presets using PIN code
- Automatic notification of the next calibration date
- Deviation of indication ± 2%

Measure, cut-out and record: When the preset torque is reached, the torque wrench cuts out and indicates this fact to the user via a definite tactile and audible signal. The tightening torques are stored. The data can be transferred to a PC for evaluation and documentation.

1 The square drive enables a broad range of insert tools

2 Dual stop signal with tactile and acoustic cut-out signals

3 Easy-to-read display

4 Rapid setting
The convenient keypad enables the torque wrench to be quickly and easily set





Also available with adaptor for 22 x 28 mm

- Tighten large torques effortlessly
- High long-term durability
- 650 – 1000 N·m



7395-1

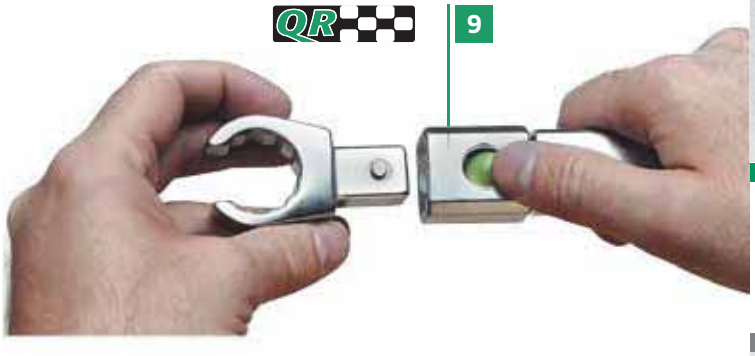

5 Power supply two 1.5 V AA batteries

6 Angle controlled tightening
Simply attach the Angle Module No 7395-1 and connect the cable to the interface

7 Data output USB interface

8 2-component handle has ergonomically designed, green softer layers and is resistant to oils, grease, fuels, brake fluids and Skydrol.

9 QuickRelease safety lock

! Further details **on page 204**

Service work & series production MANOSKOP® – indicating and click-type

215-221

- tactile and acoustic trigger signal
- mount for interchangeable insert tools
- QuickRelease safety lock
- fast setting using convenient keypad
- automatic compensation to achieve correct tightening torque even if a changed extension is entered
- overload protection by means of acoustic and visual signals
- automatic keypad lock prevents inadvertent changes
- angle-controlled measurements without a reference arm using Angle Module No 7395-1 (refer to page 205)
- display also works for anticlockwise torque
- units of measurement: N·m, ft·lb, in·lb
- different tolerance limits can be set for each joint
- visual red and green signals in the display confirm the status of the joint
- additional security for presets (function mode, trigger or preset value, unit of measurement, tolerance, save, deviating extension) using PIN code
- up to 7.500 measurements can be stored
- USB interface
- automatic notification of the next calibration date
- calibration using perfectControl calibrating unit No 7794 or calibration system No 7706
- two-component handle with ergonomically designed green softer layers (resistant to oils, grease, fuels, brake fluids and Skydrol)
- with certificate
- in sturdy plastic case (sizes 40-100 in steel case)
- patent
- supplied with two 1.5 V AA batteries. AA/LR6, 1.2 V rechargeable cells may also be used
- display deviation value ± 2%, ± 1 digit

730D Basic wrenches with tool carrier for insert tools

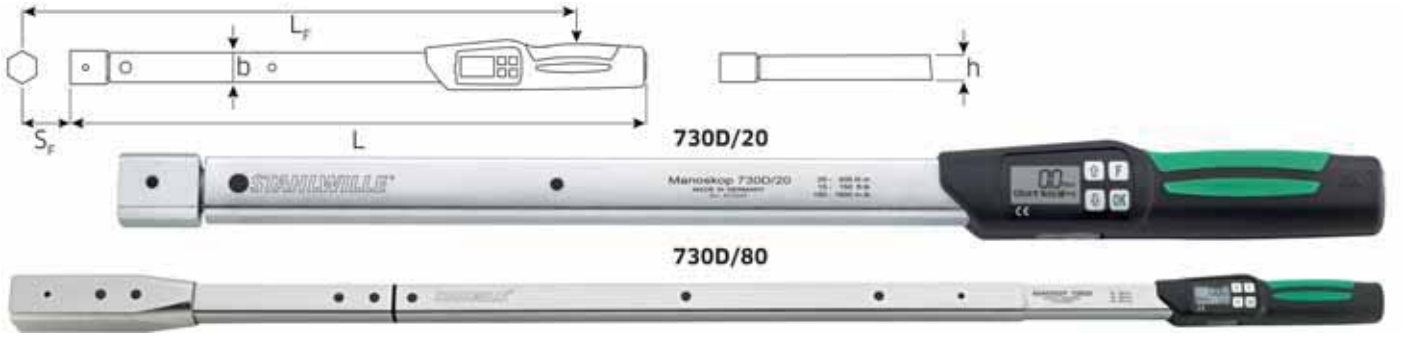

Code	size				Setting/display resolution N·m	ft·lb	in·lb	mm	b mm	h mm	L mm	L_F mm	S_F mm	g	g with box
96 50 17 10	**10**	10–100 N·m	7.4–75 ft·lb	90–900 in·lb	0.2/0.1	0.2/0.1	2/1.0	9x12	28	23	467	426.5	17.5	1085	1510
96 50 17 20	**20**	20–200 N·m	15–150 ft·lb	180–1800 in·lb	0.5/0.1	0.5/0.1	5/1.0	14x18	28	23	548	515	25	1361	1896
96 50 17 40	**40**	40–400 N·m	30–300 ft·lb	360–3600 in·lb	1.0/0.1	1.0/0.1	10/1.0	14x18	28	23	688	655	25	1765	5155
96 50 17 65	**65***	65–650 N·m	48–480 ft·lb	580–5800 in·lb	1.0/0.1	1.0/0.1	10/1.0	14x18	30.6	25.6	870	837	25	3300	6000
96 50 19 65	**II/65**	65–650 N·m	48–480 ft·lb	580–5800 in·lb	1.0/0.1	1.0/0.1	10/1.0	22x28	30.6	25.6	892	889	55	3224	7500
96 50 20 80	**80**	80–800 N·m	60–600 ft·lb	720–7200 in·lb	1.0/1.0	1.0/1.0	10/1.0	22x28	30.6	25.6	1160	1157	55	4577	10500
96 50 21 00	**100**	100–1000 N·m	74–750 ft·lb	900–9000 in·lb	1.0/1.0	1.0/1.0	10/1.0	22x28	30.6	25.6	1344	1341	55	4995	11000

* recommended ratchet insert tool No 735/40HD

730DR Basic wrenches with ratchet insert tool



Code	size				Setting/display resolution N·m	ft·lb	in·lb	mm	"	g	g with box
96 50 18 10	**10**	10–100 N·m	7.4–75 ft·lb	90–900 in·lb	0.2/0.1	0.2/0.1	2/1.0	9x12	1/2	1232	1657
96 50 18 20	**20**	20–200 N·m	15–150 ft·lb	180–1800 in·lb	0.5/0.1	0.5/0.1	5/1.0	14x18	1/2	1663	2198
96 50 18 40	**40**	40–400 N·m	30–300 ft·lb	360–3600 in·lb	1.0/0.1	1.0/0.1	10/1.0	14x18	3/4	2232	4722
96 50 18 65	**65**	65–650 N·m	48–480 ft·lb	580–5800 in·lb	1.0/0.1	1.0/0.1	10/1.0	14x18	3/4	3767	6530
96 50 20 65	**II/65**	65–650 N·m	48–480 ft·lb	580–5800 in·lb	1.0/0.1	1.0/0.1	10/1.0	22x28	3/4	3994	9000
96 50 18 80	**80**	80–800 N·m	60–600 ft·lb	720–7200 in·lb	1.0/0.1	1.0/0.1	10/1.0	22x28	3/4	6492	12500
96 50 18 00	**100**	100–1000 N·m	74–750 ft·lb	900–9000 in·lb	1.0/0.1	1.0/0.1	10/1.0	22x28	3/4	6910	12500

7759-3 USB adaptor, jack cable and software No 7732 for No 730D

Documentation and management of readings on a PC
- Read out stored wrench data and joint readings:
  - Joint identifier
  - Tool serial number
  - Date and time of tightening operation
  - Target torque or target angle
  - Torque level at which the tool cuts out
  - Tightening torque or angle reached
  - Tolerances
  - Joint evaluation
- Storage of joint data in a database
- Delete or print highlighted joints from the database
- Export displayed joint data to a CSV file (compatible with Excel)
- 13 languages
- User management
- Define new PIN
- Delete joint data stored in wrench

System requirements:
- PC
- Microsoft Windows 98 SE or compatible operating system with USB support
- USB connection
- Installed ODBC driver for Access data





Code	L m	⚖ g
96 58 36 27	1.5	137

7757-1 USB adaptor



Code	⚖ g
52 11 10 57	10

7395-1 Angle Module for No 730D

Patents applied for, angle-controlled measurement without a reference arm. For torque wrench No 730D (sizes 10-65) from software release 1.5.8. Torque wrenches No 730D fitted with older releases of the software can be upgraded. Simply attach the module and connect to the torque wrench interface and the No 730D can be used for angle controlled tightening. The measurements are read off and settings made via the torque wrench.
When the preset snug point is reached, the torque wrench automatically switches over to angle-controlled measurement in degrees.
Depending on the options selected, the torque wrench will either cut out when the preset angle is reached or an alarm is heard.
One 1.5 V battery is included in the package. Deviation of indication ± 1%.



Code	⚖ g
96 58 36 28	387

7751 Jack cable

with jacks at both ends, 90° angled.



Code	L m	⚖ g
52 11 00 51	1.5	50



MANOSKOP® 714
Electromechanical angle-controlled torque wrench



Benefits at a glance:

- Indicating and click-type
- 4 measuring methods (torque, angle, torque backed up by angle, angle backed up by torque)
- Freely configurable menu structure
- Includes SENSOMASTER software for easy configuration of the tool
- 3 function modes: click-type, peak (indicating mode displaying peak reading) and track (indicating mode displaying current value)
- Angle-controlled measurement without a reference arm
- Data storage (≤ 2,500 tightening jobs)
- Acoustic and visual assessment of the joint
- Clockwise and anticlockwise tightening
- Tactile and acoustic trigger signals
- Torque and angle are simultaneously visible
- All readings are independent of the point of application of force with sizes 1, 2 and 4
- Display deviation value ± 2 % for torque and ± 1% for angle

1 High-definition graphical colour display with additional side-mounted indicator lamps

2 Automatic key-lock prevents inadvertent changes

3 Fast, accurate setting via keypad

4 Own ident number can be stored in the wrench

5 Indicator lamps clearly visible from all sides
Yellow light: advance warning threshold reached
Green light: within the target range
Red light: reading is outside the tolerance range

6 In a sturdy plastic case with foam inlays (sizes 40–100 in steel case)
With certificate





Also available with adaptor for 22 x 28 mm

- Tighten large torques effortlessly
- High long-term durability
- 650 – 1000 N·m





No 7195-2



No 7160





7 Optional extras: Li-Ionen battery No 7195-2 and charger No 7160

8 Individually configurable menus

9 Micro USB interface

10 Battery compartment with smooth-action bayonet fitting

11 Up to 200 joints can be programmed in up to 25 sequences

12 The wrench reminds the user automatically when calibration is due – either by the number of joints or the time interval



Further details **on page 208**

MANOSKOP® 714 – indicating and click-type Electromechanical angle-controlled torque wrench

- 4 measuring modes (torque, angle, torque backed up by angle, angle backed up by torque)
- high-definition colour display with additional side-mounted indicator lamps
- freely configurable menu structure
- optionally: Li-ion battery No 7195-2 and charger No 7160
- 3 function modes: cut-out, peak (indicating mode with peak value) and track (indicating mode with current value)
- Micro USB interface
- bayonet connection for battery compartment
- QuickRelease safety lock change system for insert tools 215-221
- angle-controlled measurement without a refer[illegible]e arm
- Data storage (≤ 2500 tightening jobs)
- as many as 200 joints can be programmed in up to 25 preset sequences.
- different tolerance limits can be set for each joint
- acoustic and visual assessment of the joint
- rapid, accurate setting via keypad
- the automatic keypad lock prevents inadvertent changes
- overload protection by means of acoustic and visual signals and a fail-safe system (clockwise)
- automatic notification of the next calibration date, either by the number of joints or the time interval
- fully automated calibrating and adjusting using the perfectControl calibrating and adjusting unit No 7794-2 (torque) or 7794-3 (torque and angle)
- units of measure: N·m, ft·lb, in·lb.
- tightening torque is automatically corrected if a deviating extension is entered
- immediately reusable after release
- clockwise and anticlockwise tightening – it may be necessary to refit the insert tool rotated through 180° for anticlockwise tightening in the cut-out mode
- tactile and acoustic trigger signal.
- torque and angle are simultaneously visible
- all readings are independent of the point of application of force (with sizes 1, 2 and 4)
- safe handling due to ergonomically designed handle (resistant to oils, grease, fuels, brake fluid and Skydrol)
- 2 certificates (torque, angle)
- in sturdy plastic case (size 40-100 in steel case)
- design patent, patent
- supplied with SENSOMASTER Basic software, USB cable, 4 AAA/LR03 micro-batteries, 1.5 V. AAA, 1.2 V, micro NiMH rechargeable batteries can be used
- display resolution, angle 0.1°
- display deviation value, angle ±1%, ±1 digit
- display resolution, torque ≤ 60 N·m: 0.01 N·m; > 60 N·m: 0.1 N·m
- display deviation value, torque ±2%, ±1 digit

714 Basic wrenches with tool carrier for insert tools

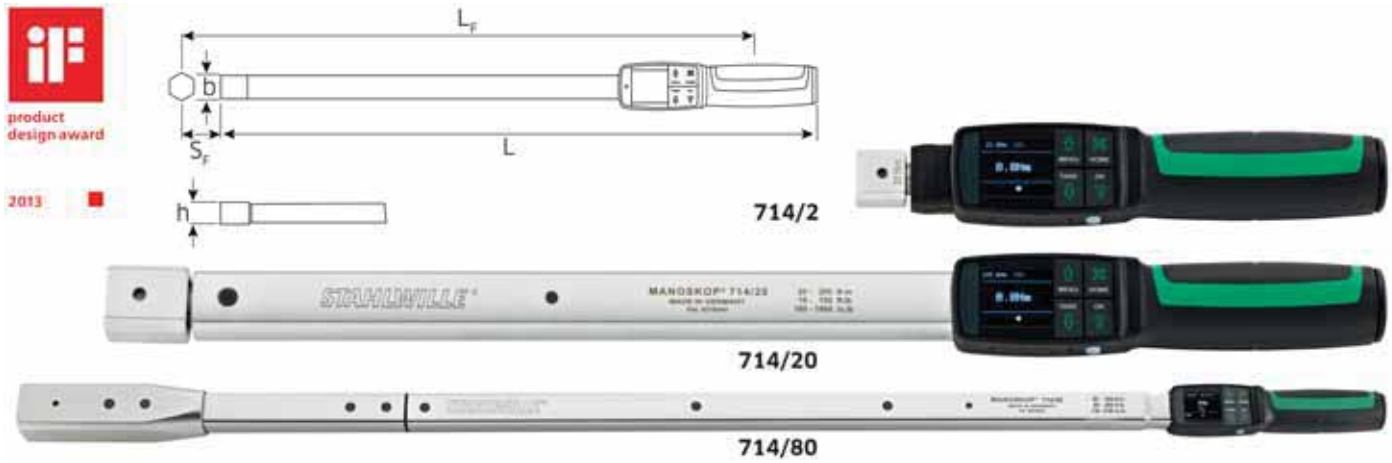

Code	size				mm	b mm	h mm	L mm	L_F mm	S_F mm	g	g with box
96 50 09 01	**1**	1–10 N·m	0.7 –7.5 ft·lb	9–90 in·lb	9x12	28	23	226	188	17.5	370	795
96 50 09 02	**2**	2–20 N·m	1.5–15 ft·lb	18–180 in·lb	9x12	28	23	226	188	17.5	380	805
96 50 09 04	**4**	4–40 N·m	3–30 ft·lb	36–360 in·lb	9x12	28	23	252	214	17.5	420	845
96 50 09 06	**6**	6–60 N·m	4.5–45 ft·lb	54–540 in·lb	9x12	28	23	393	355	17.5	810	1235
96 50 09 10	**10**	10–100 N·m	7.4–75 ft·lb	90–900 in·lb	9x12	28	23	466	428	17.5	1085	1655
96 50 09 20	**20**	20–200 N·m	15–150 ft·lb	180–1800 in·lb	14x18	28	23	547	516	25	1361	1896
96 50 09 40	**40**	40–400 N·m	30–300 ft·lb	360–3600 in·lb	14x18	28	23	687	656	25	1765	5155
96 50 09 65	**65**	65–650 N·m	48–480 ft·lb	580–5800 in·lb	22x28	30.6	25.6	890	890	55	3222	7000
96 50 09 80	**80**	80–800 N·m	60–600 ft·lb	720–7200 in·lb	22x28	30.6	25.6	1158	1158	55	4572	10400
96 50 01 00	**100**	100–1000 N·m	74–750 ft·lb	900–9000 in·lb	22x28	30.6	25.6	1343	1343	55	4990	10500

714R Basic wrenches with ratchet insert tool



Code	size				mm	"	g	g with box
96 50 10 01	**1**	1–10 N·m	0.7–7.5 ft·lb	9–90 in·lb	9x12	1/4	432	857
96 50 10 02	**2**	2–20 N·m	1.5–15 ft·lb	18–180 in·lb	9x12	1/4	442	867
96 50 10 04	**4**	4–40 N·m	3–30 ft·lb	36–360 in·lb	9x12	1/4	482	907
96 50 10 06	**6**	6–60 N·m	4.5–45 ft·lb	54–540 in·lb	9x12	3/8	965	1390
96 50 10 10	**10**	10–100 N·m	7.4–75 ft·lb	90–900 in·lb	9x12	1/2	1232	1657
96 50 10 20	**20**	20–200 N·m	15–150 ft·lb	180–1800 in·lb	14x18	1/2	1663	2198
96 50 10 40	**40**	40–400 N·m	30–300 ft·lb	360–3600 in·lb	14x18	3/4	2275	5665
96 50 10 65	**65**	65–650 N·m	48–480 ft·lb	580–5800 in·lb	22x28	3/4	5137	9000
96 50 10 80	**80**	80–800 N·m	60–600 ft·lb	720–7200 in·lb	22x28	3/4	6487	12300
96 50 11 00	**100**	100–1000 N·m	73–735 ft·lb	885–8850 in·lb	22x28	3/4	6905	12500

7732-2 SENSOMASTER Live software

- Record tightening operations with the MANOSKOP® 714.
- Representation of torque over time, angle over time, torque over angle.
- Representation of several curves simultaneously.
- Data export for further processing.
- The software is for a single-seat licence.
- Torque wrenches 714/1 … /100 must have firmware version 02.01.02.



Code	g
96 58 52 35	111

7195-2 Li-ion battery for No 714

max. charge voltage 4.2 V,
capacity 2600 mAh



Code	g
54 10 11 95	100

7160 Charging dock for Li-ion battery No 7195-2

including charger
Input: 100 V–240 V AC ,
Output: 4.2 V DC,
with interchangeable socket adaptors.



Code	g
54 10 00 60	200

7762 Docking station for No 714

stationary base for securely connecting angle-controlled torque wrench No 714 to a PC via a USB port.



Code	g
52 11 00 62	421



7762-1 Rest for docking station No 7762

for securely supporting long angle-controlled torque wrenches No 714 from size 6 up.



Code	g
52 11 01 62	520

7761/3 Interface adaptor set

required for automated calibration and adjustment of angle-controlled torque wrench No 714 using calibrating and adjusting units perfectControl No 7794-2 and 7794-3.
Contents
No 7761 interface adaptor
No 7752 spiral cable
No 7760 mains adaptor



Code	g
96 52 11 61	446



Sensotork® 713R

Electronic angle-controlled torque wrench



Benefits at a glance:

- Angle-controlled measurements without a reference arm
- Broad measuring range (5% – 100% of rated value)
- Extremely wide range of angle measurement
- Units of measurement N·m / ft·lb / in·lb
- Clockwise and anticlockwise use
- For use with all insert tools 9x12 and 14x18 mm
- QuickSelect rapid recall of predefind sets of operating parameters
- Defined sequence – a number of repeated joints can be grouped as
- a defined sequence
- Readings can either be directly stored, transmitted to the PC or simply displayed
- Password protection tamper proof use
- Freely selectable names for each series of test
- Various languages available
- Works-specific identifier
- Programmable via PC
- Resistant to oils, grease, fuels, brake fluids and Skydrol
- Wide range of application: –20°C to +60°C
- Meets requirements of DKD-R 3-7, Class 2
- Deviation of indication ± 1%







1 Warning signals: acoustic (buzzer), tactile (vibration in the handle), visual (LEDs and display). The point at which the warning signal is triggered can be freely set

2 Amazingly simple handling
All functions are selected using the arrow keys. The visual guidance system makes operation a simple matter

3 Measurements independent of the point of application of force (sizes 6 and 20)

4 Easy extension setting
Where the insert tool requires an extension adjustment, simply enter the new value. Recalculation using complicated formulae is no longer necessary

5 Data output USB interface

6 QuickRelease
Firm locking and rapid change of any insert tools



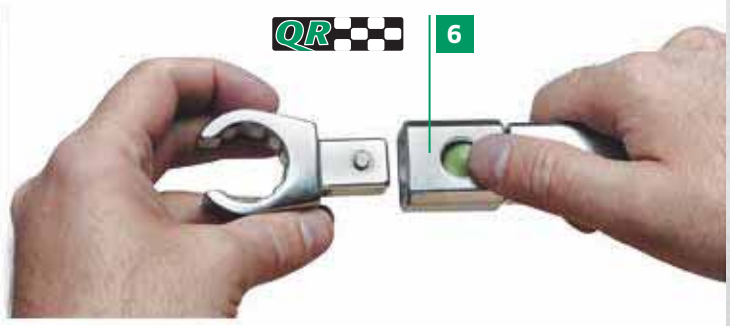

Further details
on page 212

Electronic angle-controlled torque wrench Sensotork® 713R

- simple, flexible operation thanks to operator guidance on large-format display
- very broad measuring range (5% to 100% of rated value)
- supplied with insert tool reversible ratchet, more insert tools
- QuickRelease safety lock
- for clockwise and anticlockwise torquing
- measurements independent of the point of application of force (sizes 6 and 20)
- units of measurement: N·m, ft·lb, in·lb
- advance warning points programmable for visual, tactile and acoustic signals
- torque and angle are simultaneously visible
- convenient angle measurement across a very wide angle range without a reference arm
- insert tool lengths can be individually set
- maintenance friendly due to easy adjustment and automatic reminder of next calibration date
- repeated joints can be collated to form a single menu-guided sequence
- individual identification markings possible
- password protection to prevent inadvertent changes and make the tool tamper-proof
- meets requirements of DKD-R 3-7, Class 2
- with certificate
- in sturdy plastic case (size 40 in tough steel case)
- supplied with three 1.5 V AA batteries. AA/LR6, 1.2 V NiMH rechargeable cells may also be used.
- fully automated calibration (torque) using perfectControl calibrating unit No 7794-2. Adjustment without disassembly.
- registered design
- display deviation value for angle ± 1°
- display deviation value ± 1%

215-221

713R Electronic angle-controlled torque wrenches Sensotork®

QR

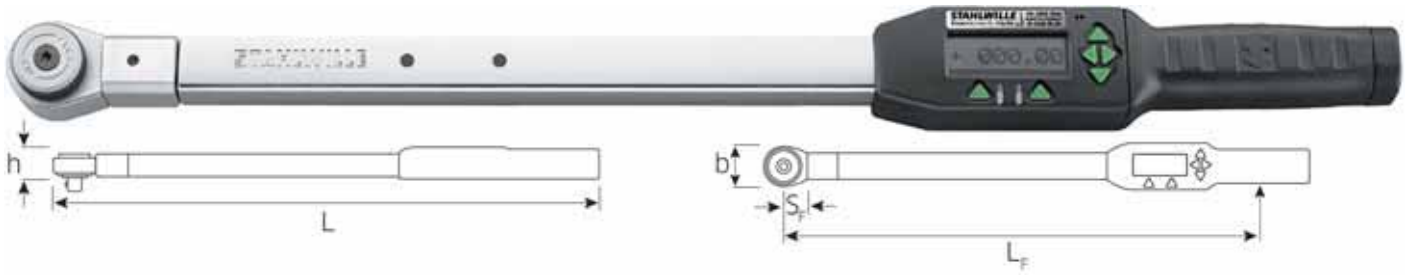

Code	size			■ "	mm	b mm	h mm	L mm	L_F mm	S_F mm	g	g with box
96 50 16 06	**6**	3–60 N·m	2.5–44 ft·lb	3/8	9x12	50	33.5	378	299	17.5	856	1500
96 50 16 20	**20**	10–200 N·m	7–148 ft·lb	1/2	14x18	50	33.5	608	524	25	1552	2430
96 50 16 40	**40**	20–400 N·m	15–296 ft·lb	3/4	14x18	50	33.5	838	750	25	2332	5555

Electronic torque wrench Sensotork® 712R

712R/6 Electronic torque wrench Sensotork®

QR

Registered design, electronic torque wrench with option of attaching interchangeable insert tools, same design as No 713 but without angle function.

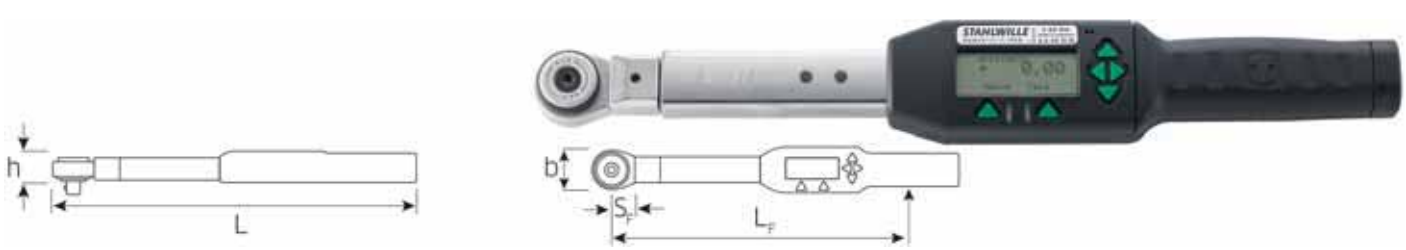

Code			■ "	mm	b mm	h mm	L mm	L_F mm	S_F mm	g	g with box
96 50 15 06	3–60 N m	2.5–44 ft.lb	3/8	9x12	50	33.5	378	299	17.5	856	1500

Accessories for electronic angle-controlled torque wrench Sensotork® No 713R and electronic torque wrench Sensotork® No 712R

7759-1 USB adaptor, jack cable and software SENSOMASTER for No 712R, 713R

for documenting and managing readings on a PC and carrying out statistical analyses.

- Read out stored wrench data and joint readings: Joint identifier, Tool serial number, Target torque or target angle, Torque level at which the tool cuts out, Tightening torque or angle reached, Tolerances, Joint evaluation
- Storage of joint data in a database
- Delete or print highlighted joints from the database
- Export displayed joint data to a CSV file (compatible with Excel)
- 13 languages
- User management
- Define new PIN
- Delete joint data stored in wrench

System requirements:

- PC
- Microsoft Windows 98 SE or compatible operating system with USB support
- USB connection
- Installed ODBC driver for Access data





Code	L m	g
96 58 36 25	1.5	137

7757-1 USB adaptor



Code	g
52 11 10 57	10

7751 Jack cable

with jacks at both ends, 90° angled.



Code	L m	g
52 11 00 51	1.5	50

Sensotork® 713R.
The most accurate of them all.



7301/7302 Plastic case, empty

for safe storage and transport of torque wrenches
(please order inlays separately).
Supplied without torque wrench.



Code	No	for torque wrenches No	L mm	g
81 37 00 02	**7301**	712R/6; 713R/6; 714/1; 714/2; 714/4; 714/6; 714/10; 721/5; 721/15; 730/5; 730/10; 730/12; 730/20; 730a/5; 730a/10; 730a/12; 730a/20; 730N/5; 730N/10; 730N/12; 730N/20; 730Na/5; 730Na/10; 730Na/20; 730D/10	550	425
81 37 00 03	**7302**	713R/20; 714/20; 721/30; 730/40; 730N/40; 730Na/40; 730D/20	680	535

Inlays for plastic case

Code	for torque wrenches No	g
83 07 10 04	712R/6; 713R/6; 721/5; 721/15; 730/5; 730/10; 730/12; 730/20; 730a/5; 730a/10; 730a/12; 730a/20; 730N/5; 730N/10; 730N/12; 730N/20; 730Na/5; 730Na/10; 730Na/20; 730D/10	88
83 07 10 02	713R/20; 721/30; 730/40; 730N/40; 730Na/40; 730D/20	113

7380N/7385N Torque angle gauges

for angle controlled bolt/screw tightening, with static read-off point.
Read-off possible from any angle thanks to a pair of angled scales.
Removable magnet for attaching sockets with 1/2" internal square drive.
For use in conjunction with tightening tools such as Service MANOSKOP®
No 730N.
Since this tightening method requires a pre-determined snug torque to be applied, it is essential to choose a torque wrench covering both snug torque as well as maximum torque required to reach the recommended tightening angle. Whether 1/2" or 3/4" sq.dr.
Torque Angle Gauge is used depends upon the square drive of the appropriate torque wrench employed.

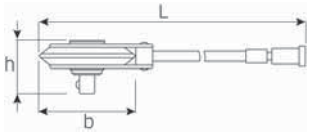



Code	No	○ "	■ "			b mm	h mm	L mm	g
54 01 00 01	**7380N**	1/2	1/2	± 360°	2°	78	43	416	494
54 01 00 02	**7385N**	3/4	3/4	± 360°	2°	78	76	416	720

1299 BITS

for inside hexagon screws,
for operating the adjusting screws on torque wrenches
No 720, 721, 730 and 730N.



Code	mm	outside ⬣	"	L mm	g	
08 09 00 02	2	C 6.3	1/4	34	4	10

outside ⬣ DIN 3126/ISO 1173

7161 QuickRelease safety lock

prevents insert tools being swapped.
The system is locked in place on the head of the torque wrench by means of a safety screw.
Once the protection system has been fitted, it is possible to attach an insert tool but not to remove it because the QuickRelease unlock button itself is locked.
After the safety screw has been removed, the torque wrench reverts to being a standard, versatile tool.
The safety screw can be fitted and removed using a TORX® screwdriver with a central bore in the tip (No 4656, Size T20, Code 46 56 00 20) or a BITS screwdriver insert with a central bore in the tip (No 1442, Size T20, Code 08 16 00 20).



Code	size	for torque wrenches No	g
54 10 00 70	**1**	714/1; 714/2; 714/4	4
54 10 00 71	**2**	712R/6; 713R/6; 714/6; 714/10; 730/10; 730a/10; 730N/10; 730Na/10; 730D/10	5
54 10 00 72	**3**	713R/20; 713R/40; 714/20; 714/40; 730/12; 730/20; 730/40; 730/65; 730a/12; 730a/20; 730N/12; 730N/20; 730N/40; 730N/65; 730Na/20; 730Na/40; 730D/20; 730D/40; 730D/65	11
54 10 00 73	**4** ✹	730/5; 730N/5	2
54 10 00 74	**5** ✹	714/65; 714/80; 714/100; 730II/65; 730NII/65; 730N/80; 730N/100; 730DII/65; 730D/80; 730D/100	15

for other torque wrenches on request.

7396 LED lighting

for torque wrenches
If light is poor, simply attach this LED lamp to illuminate the work site.
Included in the delivery is a 1.5 V micro battery.
Supplied without torque wrench.



Code	for torque wrenches No	g
54 01 00 04	712R/6; 713R/6; 713R/20; 713R/40; 714/6; 714/10; 714/20; 714/40; 721/5; 721/15; 721/30; 730/5; 730/10; 730/12; 730/20; 730/40; 730a/5; 730a/10; 730a/12; 730a/20; 730N/5; 730N/10; 730N/12; 730N/20; 730N/40; 730Na/5; 730Na/10; 730Na/20; 730Na/40; 730D/10; 730D/20; 730D/40	51