FENIX 200 SERIES

Rockwell | Brinell Hardness Testers

MANUAL & SEMI - **AUTOMATIC**



INNOVATEST®
Advanced Hardness Testing Solutions

FENIX **200** AR

Fast & affordable Rockwell testing…

Quality long life mechanics, readings from a precision analogue indicator. Load applied from a dead weight force actuator, with solid test load selector design. The newly designed C frame made out of steel (no casting) provides 100% more rigidity compared to traditional casted designs and assures excellent GR & R results, even after years of use.

The internal system can be easily serviced by removing the side and top covers, no need to turn the machine around.



HARDNESS SCALES

ROCKWELL 10kgf – 150kgf



ROCKWELL FORCE RANGE

1kgf	10kgf	FENIX 200 AR	150kgf	187.5kgf

HIGHLIGHTS

1. Rockwell scales A, B, C, D, E, F, G, H, K, L, M, P, R, S, V
2. Test loads, pre-load 10kgf, main-load 60, 100, 150kgf
3. Adjustable hydraulic force speed damper
4. Adjustable dial indicator with 0.5 HR Rockwell units
5. Throat depth 150mm
6. Working height 240mm
7. Rockwell EN-ISO 6508, ASTM E-18
8. Machine weight (net) 126kg
9. Machine dimensions H765mm/W270mm/D555mm

FENIX **200** ACL

Affordable Rockwell testing, re-invented…

Load cell, closed loop, force feedback, test force application system that absolutely unique in this class of instruments. Limited mechanical structure, without weights or weight selection. Hardness scales can be selected on the digital display. Conduct Rockwell hardness testing with great force precision and without the disadvantage of a relative complex mechanical dead weight system.

The internal system can be serviced by removing the side and top covers, no need to turn the machine around.





HARDNESS SCALES

ROCKWELL 10kgf – 150kgf

BRINELL 10kgf – 187.5kgf



TECHNOLOGY OF TODAY

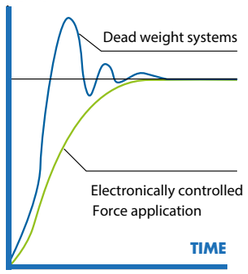

Load cell, closed loop,
force feedback system

ROCKWELL & BRINELL FORCE RANGE

1kgf	10kgf	FENIX 200 ACL	187.5kgf

HIGHLIGHTS

1. Load cell, closed loop, force feedback, force application system, error <0,25%
2. Rockwell scales A, B, C, D, E, F, G, H, K, L, M, P, R, S, V
   Brinell scales HBW1/10, HBW1/30, HBW2.5/15.625, HBW2.5/31.25, HBW2.5/62.5, HBW2.5/187.5, HBW5/25, HBW5/62.5, HBW5/125, HBW5/187.5, HBW10/100
3. Digital display for scale indication, dwell time count down and calibration function.
4. Start/stop & menu selection buttons.
5. Adjustable dial indicator with 0.5 HR Rockwell units
6. Throat depth 150mm
7. Working height 240mm
8. Machine weight (net) 116kg.
9. Machine dimensions H765mm/W270mm/D555mm

SENSIBLE
INNOVATION



Observe, Think, Try, Change...

Unparalleled in this class of Rockwell hardness testing machines is the electronic Load cell, closed loop, force feedback, force application system. Absolute maintenance free, automatic setting of test forces by choosing the Rockwell hardness scale. Error free operation, due to an automatic test cycle, applying the main load and correct pre-set dwell time.

VARIOUS
POSSIBILITIES

The FENIX is larger than most other machines in its class. With a throat depth of 150mm and maximum workpiece height of 240mm, it offers the user a generous workspace. With 116kg total weight, the FENIX is also super ridgid and sturdy, it can withstand harsh environments.
Compare these parameters with alternative products and find that FENIX is leading in its class.



INDENTER COVER & CLAMP

The 200 series is standard equipped with an indenter protection cover that includes an integrated spring loaded workpiece clamp pressing the workpiece firmly on the anvil and eliminating possible workpiece and spindle hysteresis. Adjustable clamp force, to avoid impressions on softer materials.

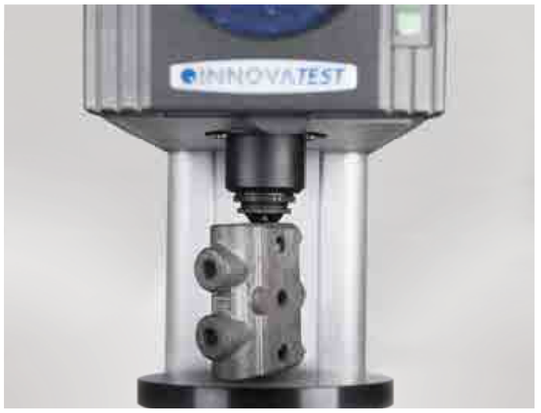



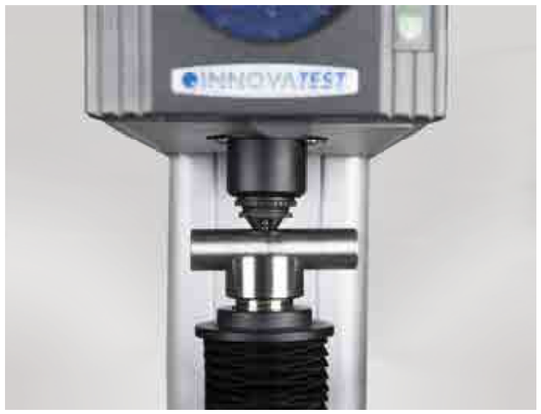









SUPPORT YOUR BEST TESTING RESULTS

With our rigid designed Bench stands

- Rock solid bench stands
- 100% retractable drawer, bearing guidance, max 100kg load. Rubber anti slip bottom
- Lockable cabinet, 300mm high
- Adjustable feet, (+/- 50mm height adjustable to reach ergonomic working position)
- Made of corrosion resistant zinc plated steel with RAL powder coating
- Carrying capacity of 400kg
- Top surface made of 50mm Plywood with 1.5mm chemical resistant plastic plating, edges made of shock resistant 3mm ABS side liner
- Industrial quality, for workshop or laboratory

Designed for hardness testing instruments, painted in INNOVATEST® RAL colors matching our testers.



UN-STAND/960 71 x 75 x 80 cm



UN-STAND/965 150 x 75 x 80 cm

ACCESSORIES FENIX 200

Schematic overview of the configuration options, standard and optional accessories

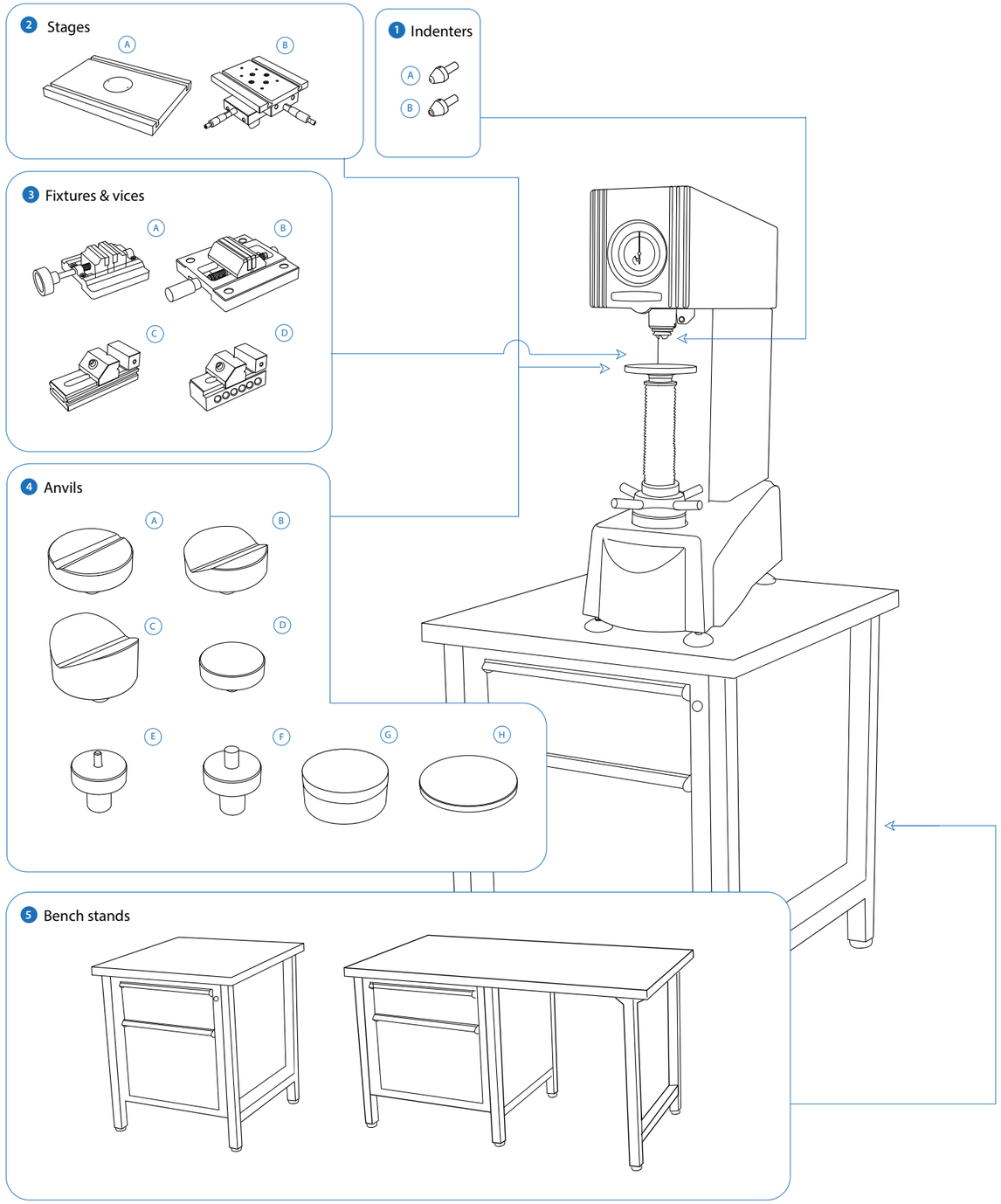

Not all accessories are displayed on this page. Full details can be found on the Order details page.

ORDER DETAILS

FENIX 200



FENIX 200 AR Rockwell hardness tester	FENIX 200 AR	
FENIX 200 ACL Rockwell (Brinell) hardness tester	FENIX 200 ACL	

ACCESSORIES

1		A	Rockwell cone diamond indenter, factory certified		STANDARD
			Rockwell cone diamond indenter & ASTM/ISO certificate		
			Rockwell indenter 1/16" carbide ball & ASTM/ISO certificate		
			Rockwell indenter 1/8" carbide ball & ASTM/ISO certificate		
			Rockwell indenter 1/4" carbide ball & ASTM/ISO certificate		
			Rockwell indenter 1/2" carbide ball & ASTM/ISO certificate		
		B	Brinell Indenter 1mm & 1 carbide ball & ASTM/ISO certificate		
			Brinell indenter 2.5mm & 1 carbide ball & ASTM/ISO certificate		
			Brinell indenter 5mm & 1 carbide ball & ASTM/ISO certificate		
			Brinell indenter 10mm & 1 carbide ball & ASTM/ISO certificate		
2	Stages	A	Flat test table with 2, T-slots, 350x250mm, requires ASV700-21-01 locking Ring	UN-TESTTABLE/015	
			Locking ring	ASV700-21-01	
		B	Manual X-Y stage with analogue metric micrometers, 180x160mm Displacement: 25x25mm, scale 0.01mm, max load 300kg, requires UN-XYZ BUSH42 1x + UN-XYZ30FP40-42 1	UN-TESTTABLE/030	
			Fixing bush 42 XY Stage	UN-XYZ BUSH42	
			Fixing plate 40-42 XY Stage	UN-XYZ30FP40-42	
3	Fixtures and vices	A	Polished precision vice with lock down system, jaw 25mm, depth 20mm	UN-VICE/210	
			Polished precision vice with lock down system, jaw 36mm, depth 42mm	UN-VICE-215	
			Polished precision vice with lock down system, jaw 48mm, depth 75mm	UN-VICE-220	
			Polished precision vice with lock down system, jaw 75mm, depth 100mm	UN-VICE-230	
4	Anvils	A	Flat Anvil 60mm	ASX600-19-04	STANDARD
		B	V-Anvil ø80mm 3.3-20mm	UN-ANVIL/040	
		C	V-Anvil ø80mm 12-80mm	UN-ANVIL/045	
		D	V-Anvil ø80mm 20-140mm	UN-ANVIL/050	
		E	Spot anvil 5mm	UN-ANVIL/010	
		F	Spot anvil 10mm	UN-ANVIL/011	
		G	Testing table flat 150mm ø	ASX600-19-06	
		H	Irregular part table support, ø150mm	UN-ANVIL/020	
	Machine cover		Anti Static machine cover	UN-TESTERCOVER06	
5	Bench stands		Cabinet test table with drawer 71x75x80cm	UN-STAND/960ST	
			Cabinet test table with drawer 150x75x80cm	UN-STAND/965ST	
			Pre installation, calibration, handling and standard packing (for sea and airworthy transportation)	SEAPACK/032	

ACCESSORIES

INDENTERS



* Without ISO/ASTM Certificate

STAGES

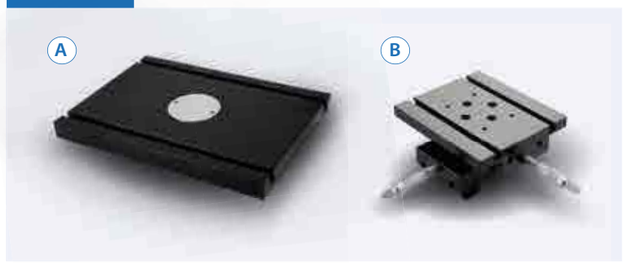

FIXTURES & VICES



ANVILS



SPECIFICATIONS

HARDNESS SCALES

ROCKWELL EN-ISO 6508, ASTM E-18 JIS Z 2245	A, B, C, D, E, F, G, H, K, L, M, P, R, S, V
BRINELL* EN-ISO 6506, ASTM E92 JIS Z 2243	HBW1/10, HBW1/30, HBW2.5/15.625, HBW2.5/31.25, HBW2.5/62.5, HBW2.5/187.5, HBW5/25, HBW5/62.5, HBW5/125, HBW5/187.5, HBW10/100 * FENIX 200 ACL only

TEST FORCE 200 AR

Force application	Dead weight system via load selector
Test forces	Preload 10kgf , main loads 60, 100, 150kgf
Force range	FENIX 200 AR 10kgf – 150kgf
Test force tolerance	< 1% for test force 10kgf to 150kgf
Dwell time settings	Default 10 seconds, user defined. Up to 999 seconds

TEST FORCE 200 ACL

Force application	Load cell, closed loop, force feedback system
Test forces	Preload 10kgf , main loads 15.625, 25, 30, 31.25, 60, 62.5, 100, 125, 150, 187.5kgf
Force range	FENIX 200 ACL 10kgf – 187.5 kgf
Test force tolerance	< 0.25% for test force 10kgf to 187.5 kgf
Dwell time settings	Default 10 seconds, user defined. Up to 999 seconds

GENERAL

Machine dimension	765mm x 270mm x 555mm
Machine weight	116kg
Power supply	100VAC to 240VAC, 50/60Hz, single phase
Operating temperature	10°C to 35°C, non-condensing
Power consumption	100W
Humidity	10% to 90%, non-condensing



TECHNICAL DRAWINGS

All dimensions in these drawings are in mm, approximate. Working heights and or workpiece accommodation varies depending on the stages and stage accessories used.

Please contact our sales department for more details.

FENIX 200 AR

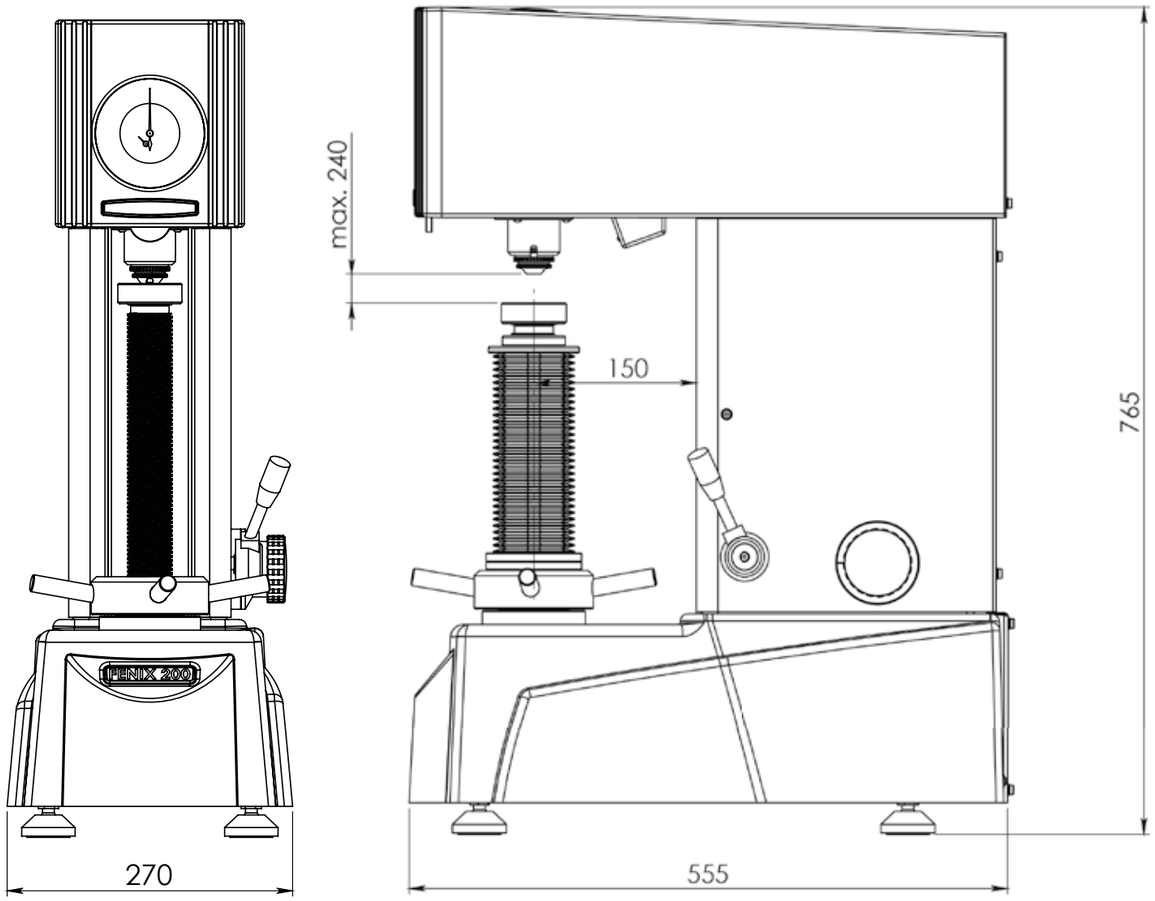

FENIX 200 ACL

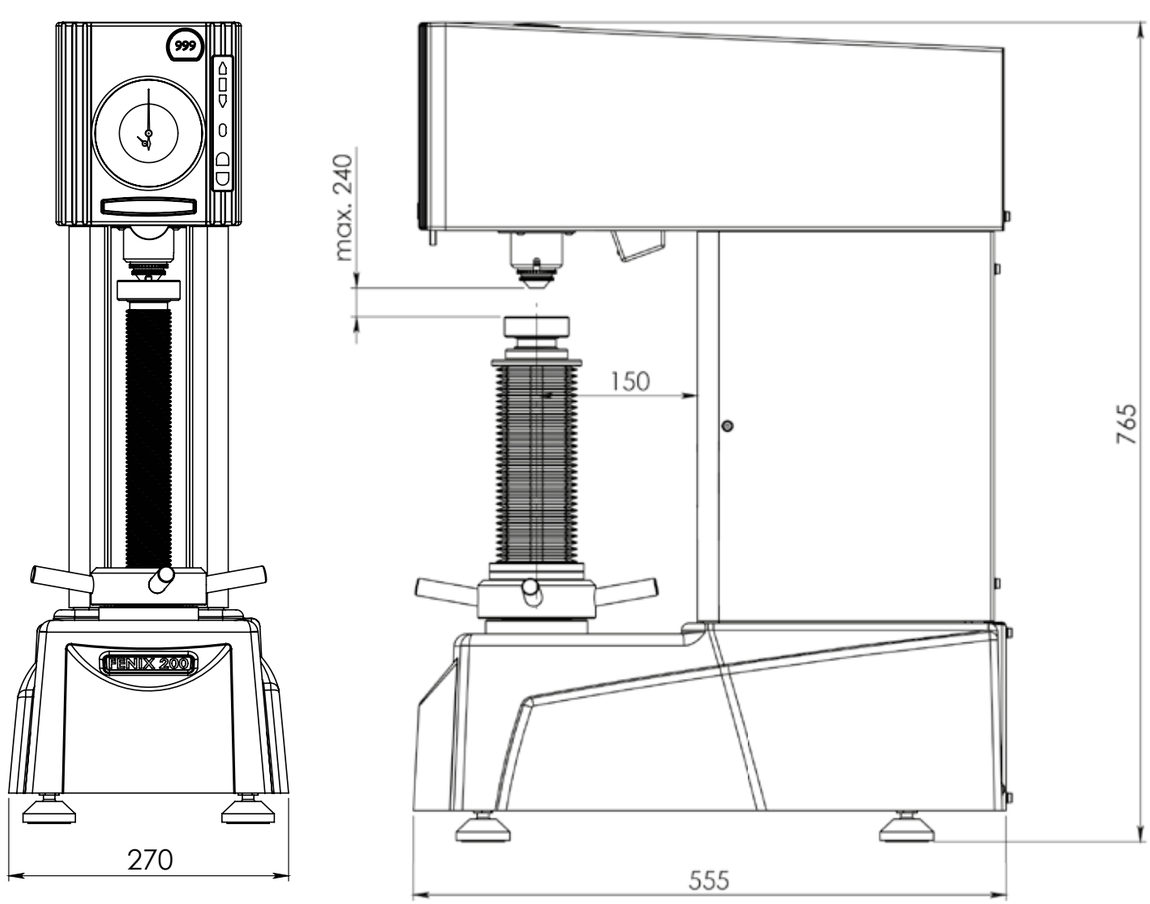

OTHER MODELS IN THE
ROCKWELL RANGE



NEXUS 605

Load Cell, closed loop Rockwell/Super Rockwell/ Brinell hardness tester, with full color touch screen.
See brochure B18N605/01



NEXUS 610

Load Cell, closed loop Rockwell/Super Rockwell/ Brinell hardness tester, with integrated PC, Windows 10, wifi etc. full color touch screen.
See brochure B18N610/01



VERZUS 710

Load Cell, closed loop Rockwell/Super Rockwell/ Brinell hardness tester, with direct depth measuring system, integrated PC, Windows 10, wifi, full color touch screen.
See brochure B18V710/01



NEMESIS 6100

Load Cell, Closed loop Fully automatic Rockwell/ Super Rockwell (Brinell) hardness tester with descending test head & fix ed workpiece position. full color touch screen operation.
See brochure B18N6100/01



NEMESIS 6200

Load Cell, Closed loop Fully automatic Rockwell/ Super Rockwell (Brinell) hardness tester with descending test head & fixed workpiece position, integrated PC, Windows 10, Wifi, full color 15 " industrial capacitive touch screen.
See brochure B18N6200/01

Includes CNC motorized X-Y stage, overview camera and advanced software (IMPRESSIONS) for automatic pattern testing and fixture recognition.

www.innovatest-europe.com



Changes in products and/ or product specifications can emerge due to new technologies and continuous development.

We reserve the right to change or modify specifications of the products without prior notice. We recommend you to contact our sales office for up-to-date information.

Brochure B18F200/01

© All rights reserved, 2018, v1.01

Distributor :

CORPORATE HEAD OFFICE

INNOVATEST Europe BV
Manufacturing, Distribution & Service
Borgharenweg 140
6222 AA MAASTRICHT
The Netherlands

Phone: +31 43 3520060
Fax: +31 43 3631168
info@innovatest-europe.com
www.innovatest-europe.com

INNOVATEST Shanghai Co,. Ltd.
Sales & Service
Buildng 2, No.123,
1165 Nong Jindu Road
South Metropolis Industrial Park
Minghang District,
Shanghai, P.R. CHINA
Zip code 201108

Phone: +86 21 60906200
Fax: +86 21 60912595
info@innovatest-shanghai.com
www.innovatest-shanghai.com

INNOVATEST Japan Co., Ltd.
Sales & Service
3-36-13, Horinouchi,
Suginami-ku, Tokyo,
JAPAN 166-0013

Phone: +81 4 2937 7540
Fax: +81 4 2937 7542
info@innovatest-japan.com
www.innovatest-japan.com

INNOVATEST South East Asia
Sales & Service
20 Sin Ming Lane #05-58
Midview City
SINGAPORE 573 968

Phone: +65 6451 1123
Fax: +65 6452 1011
info@innovatest-singapore.com
www.innovatest-singapore.com

INNOVATEST Polska sp. z.o.o
Sales & Service
Ul. Komornicka 127
62-051 Wiry
POLAND

Phone: +48 697 099 826
info@innovatest-polska.pl
www.innovatest-poland.com