KIMO INSTRUMENTS

Technical Data Sheet

Pressure / Temperature / Humidity / Air Velocity / Airflow / Sound level

Pitot tube
NPL type (L / straight)

CE

PRESENTATION

KIMO offers a broad range of P**itot tubes** of great quality and accuracy realised according to the NF X 10-112 norm.

The KIMO **Pitot tubes**, connected to a differential column of liquid manometer, with needle or electronic, enable to measure the dynamic pression of a fluid in movement in a pipe and determine its speed in m/s and its flow in m^3/h.

The **Pitot tubes** are used in climatic engineering, ventilation, dust-removal and pneumatic transport. They are particularly adapted for measurement in warm air, charged with particles and for high speed.



Pitot tube L *type*

Pitot tubes with ellipsoidal top.
A total pressure port and six holes of static pressure.
Body in full stainless steel.



Avec sonde de température intégrée

Pitot tube L *type with* **K TC**

Pitot tubes with ellipsoidal top.
A total pressure port and six holes of static pressure.
K thermocouple probe lined integrated with connecting cable of 1.5 meter long.
Body in full stainless steel.



Pitot tube straight *type* and **straight** *type* with **K TC**

It enables to carry out measurement directly by immersing the tube in the air-diffusing equipment.
Diameter and sizes : same as the NPL curved Pitot.

FEATURES

Model	AFNOR NF
Coefficient	1,0015±0,01
Material	Stainless steel 316 L
Measurement range	0 to 100 m/s
Temperature of use	from 0 to 600 °C in standard and until 1000 °C in option
Static pressure	2 bar maximum in static, hereafter on request
Global accuracy of the measurement system	Better than 1% for an alignment in relation to the flow axis of the fluid of ±10 °.
Norms	AFNOR NFX10-112. Annex of the 77.09.14 This norm is in accordance with the international norm ISO 3966.





SIZES

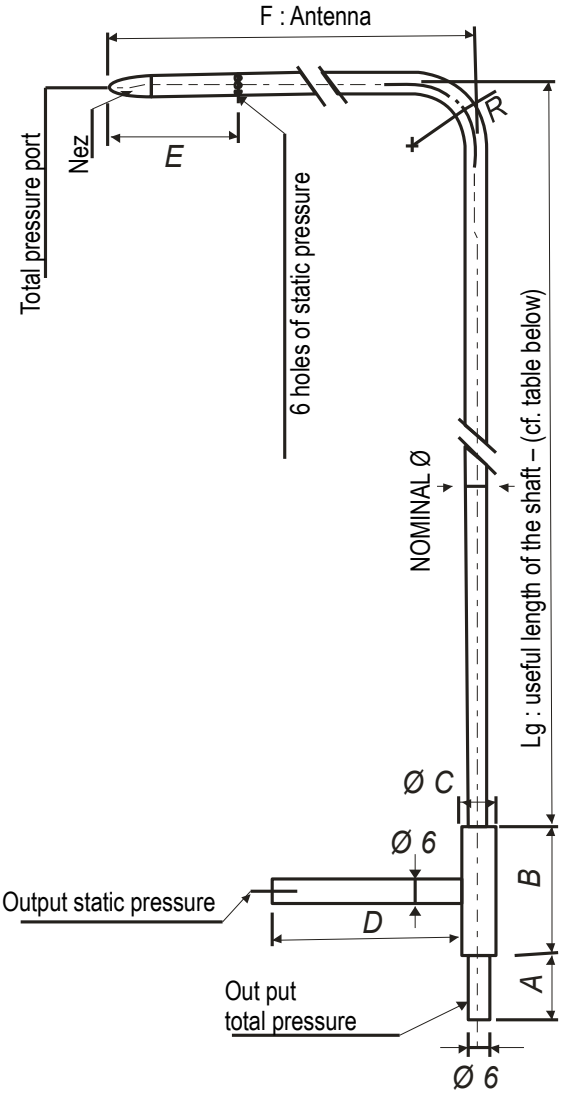

Pitot tube L type

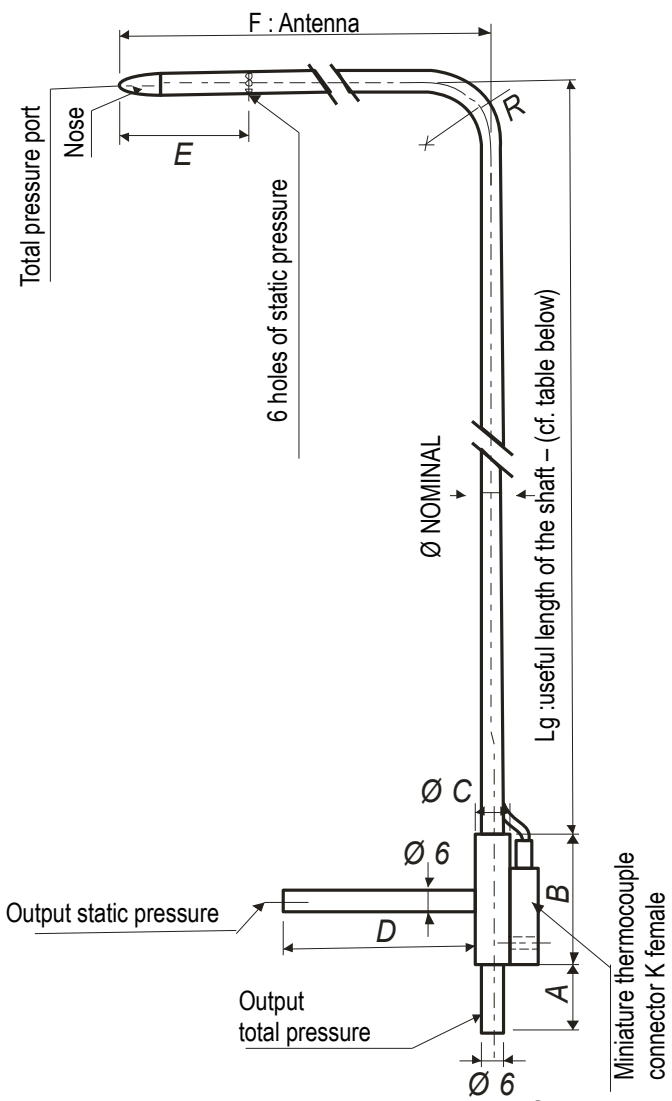

Pitot tube L type with **K TC**

	A	B	ØC	D	E	F	R
Pitot tube Ø 3 mm	17	32	10	30	25	48	9
Pitot tube Ø 6 mm	25	40	10	40	48	96	18
Pitot tube Ø 8 mm	25	40	10	50	64	128	24
Pitot tube Ø 12 mm	25	50	16	70	96	192	36
Pitot tube Ø 14 mm	25	50	16	70	112	224	42

All dimensions and ratings of this document are specified in mm.

PRESENTATION OF THE RANGE

Pitot tubes L type and **straight** type

Diameter	Reference L type	Reference straight type	Length
Ø 3 mm	TPL-03-100 TPL-03-200 TPL-03-300	TPL-D-03-100 TPL-D-03-200 TPL-D-03-300	100 mm 200 mm 300 mm
Ø 6 mm	TPL-06-300 TPL-06-500 TPL-06-800	TPL-D-06-300 TPL-D-06-500 TPL-D-06-800	300mm 500 mm 800 mm
Ø 8 mm	TPL-08-1000 TPL-08-1250	TPL-D-08-1000 TPL-D-08-1250	1000 mm 1250 mm
Ø 12 mm	TPL-12-1500 TPL-12-2000	TPL-D-12-1500 TPL-D-12-2000	1500 mm 2000 mm
Ø 14 mm	TPL-14-2500 TPL-14-3000	- TPL-D-14-3000	2500 mm 3000 mm

Pitot tubes L type and **straight** type with **K TC**

Diameter	Reference L type	Reference straight type	Length
Ø 3 mm	TPL-03-100-T TPL-03-200-T TPL-03-300-T	TPL-D-03-100-T TPL-D-03-200-T TPL-D-03-300-T	100 mm 200 mm 300 mm
Ø 6 mm	TPL-06-300-T TPL-06-500-T TPL-06-800-T	TPL-D-06-300-T TPL-D-06-500-T TPL-D-06-800-T	300 mm 500 mm 800 mm
Ø 8 mm	TPL-08-1000-T TPL-08-1250-T	TPL-D-08-1000-T TPL-D-08-1250-T	1000 mm 1250 mm
Ø 12 mm	TPL-12-1500-T TPL-12-2000-T	TPL-D-12-1500-T TPL-D-12-2000-T	1500 mm 2000 mm
Ø 14 mm	TPL-14-2500-T TPL-14-3000-T	- -	2500 mm 3000 mm

WORKING PRINCIPLE

The **Pitot tube** is introduced perpendicularly in the pipe by pre-determined points (cf. "Measurement").
The antenna composed of an ellipsoidal nose (bow) maintained in parallel and in front of the flow to control.
The total pressure (+) is picked up by the bow and is connected to the + sign of the manometer.
The static pressure (-) picked up by the small holes located around the antenna is connected to the – sign of the manometer.
The connecting cable of the K thermocouple is connected to the input K of the manometer (for the **Pitot tube type L** with **K TC**).

The device then indicates the dynamic pressure, sometimes called speed pressure.
The dynamic pressure corresponds to the difference between total pressure and static pressure : **Dp = Tp-Sp**

APPLICATION

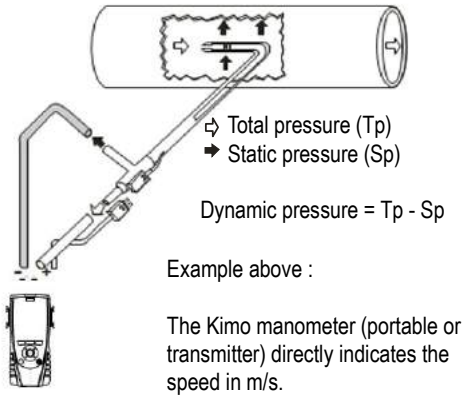







GTC Record
GTC Analyze

Transmitter sensor low differential pressure
CP210 and SQR/3



Alarm
Visualize
Operate
GTC Record
GTC Analyze
Trace in direct

Transmitter sensor low differential pressure with digital display
C310 or CA 310 with SPI 2 – 100,500,1000, 10000 and SQR/3



Alarm
Visualize
Record
Analyze
Trace in direct

Multifunction intelligent portable
AMI 310

MEASUREMENT

- **Measurement of punctual speed**

$$S = C_F \sqrt{\frac{2\Delta P}{\rho}} \qquad \rho = \frac{P_O}{287.1 \times (\Theta + 273.15)}$$

With

C_F : coefficient of the flow device element
Pitot tube L : C_F = 1.0015

Θ : given temperature (°C)
P_o : given atmospheric pressure (Pa)

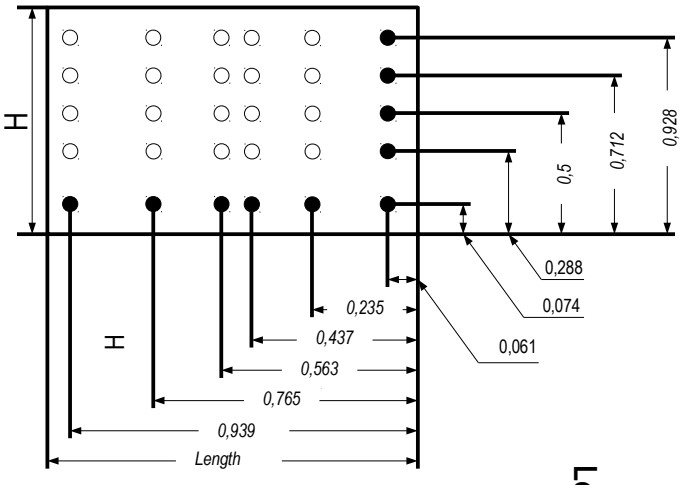

Log-Tchebychev in 3 points

- **Flow measurement**

Average (A) of several measurements of punctual speed according to Log-Tchebychev (see measurement scheme above).

Flow calculating :
Flow = $Speed_A$ x surface x 3600

Surface *:* surface of the circular sheath or rectangular in m²
N.B : in the electronic devices, the surface is automatically adjustable.

With

Flow : in m^3/h
Surface : in m^2
S_A : in m/s

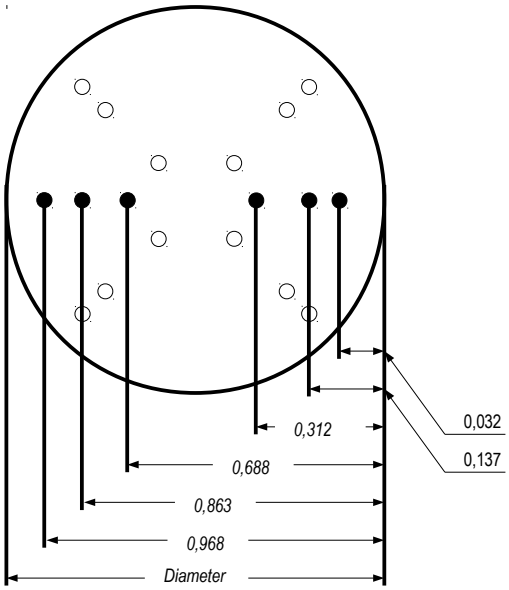

OPTIONS

- **Graduation** (mm) with red mark on the shaft, on request
- **TIG Welding** for a use until 1000°C (exception : Pitot tube Ø 3)

ACCESSORIES

- **Gland** in plated brass (for the installation of Pitot tubes for fixed station)
- **Mounting flange** stainless steel and cast iron
- **Sliding connections** with stainless steel turn or Teflon
- **Extension cable** for K thermocouple class 1
- **Stopper cap** in caoutchouc : bag of 10 pieces
- **Caps** : bag of 10 pieces
- **Tubes** :
  - → Black silicone (4 x 7 mm) REF SN-47-1
  - → Transparent silicone (4 x 7mm) REF SB-47-1
  - → Cristal tube (5 x 8 mm) REF C-58-1
- **Transport case VTP type for Pitot tubes :**
  - → 1210 X 320 mm, length 1000mm, max. Ø8
  - → 810 X 100mm, length 500mm, max. Ø6
- **555 F/F** : spherical ball valve female / female
- **J.Y.C** : junctions in Y for a tube Ø 5 x 8 mm (bag of 10)
- **J.T.C** : junctions in T for a tube Ø 5 x 8 mm (bag of 10)









For every other cases, KIMO offers special realisations. Consult us, we intervene on plans study, machining.

www.kimo.fr

Distributed by :

EXPORT DEPARTMENT
Tel : + 33. 1. 60. 06. 69. 25 - Fax : + 33. 1. 60. 06. 69. 29
e-mail : export@kimo.fr

FT_ang – Pitot-tube-L – 21/02/17 – RCS (24)Périgueux 349 282 095 -Non-contractual document – We reserve the right to modify the characteristics of our products without prior notice.