KIMO INSTRUMENTS

Technical Data Sheet

Pressure • Temperature • Humidity • Air Velocity • Air Flow

QControl quality solutions
info@qcontrol.gr www.qcontrol.gr
ΤΗΛ. 210 9416 200 FAX. 210 9415 211
Κοραή 38 183 45 Μοσχάτο

CE

DEBIMO AIR FLOW MEASURING BLADES

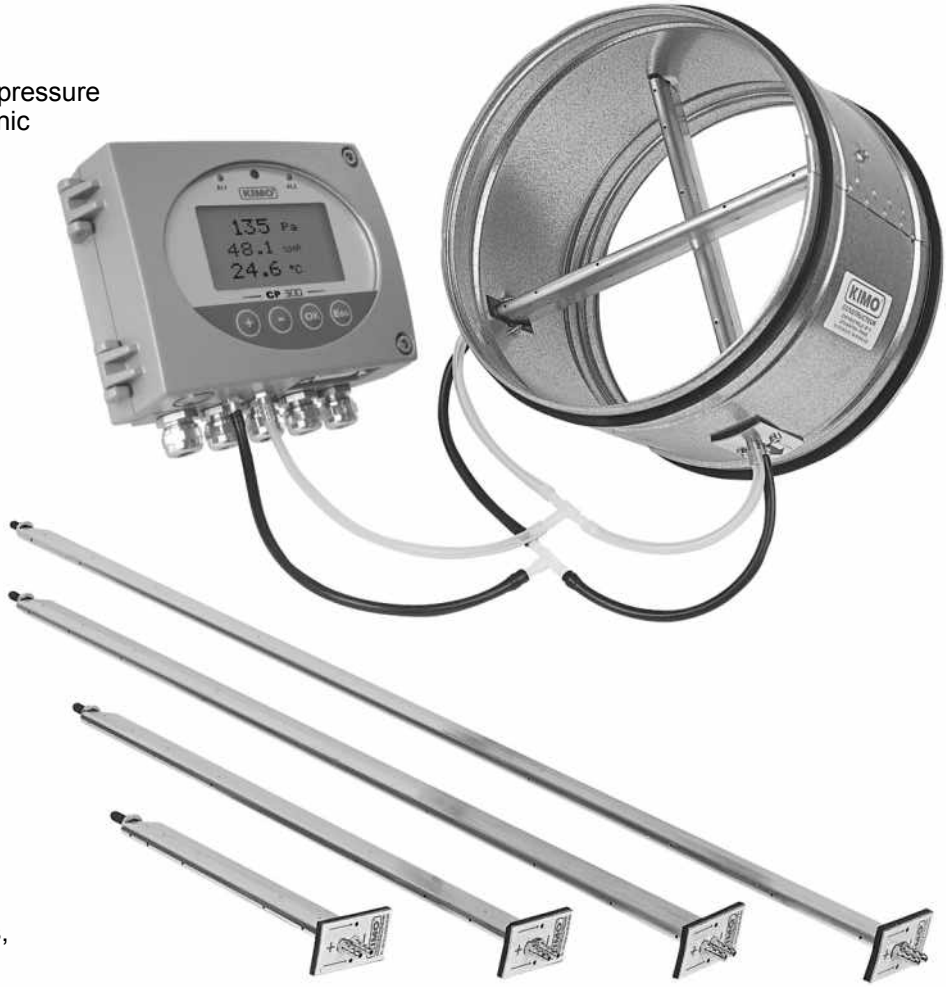

When used with a KIMO differential pressure device (pressure, transmitter, electronic micromanometer, liquid column manometer, differential pressure switch, ...), KIMO DEBIMO flow measuring blades are a simple and cost effective method of providing permanent air flow measurement in rectangular or circular ducts.
DEBIMO air flow measuring blades ensure accurate indication, control or recording of air flow velocity and volume.

KIMO has designed and manufactured the DEBIMO mesuring blades for use in all types of air flow systems.
DEBIMO flow measuring blades, when correctly placed in an air flow, generate a differential pressure, the square root of which is proportional to the air flow.

Applications : air supply systems in laboratories, air conditioning systems, air flow test rigs, fume extraction and exhaust systems, vacuum cleaning systems.

- **Permit velocity measurements from 3 to 100m/s (9 Pa to 10000 Pa).**
- **Airfoil section limiting differential heads (<3%) and turbulences.**
- **Distribution of the measurement apertures on the airfoil permitting the medium air flow control (average of the differential pressures).**

Description

The choice of the number of blades depends on the shape of the duct and the accuracy wished.One or several DEBIMO blades can be used depending on the applications (seemounting examples)

• Sizes available

Ref.	Usefull length in mm
DEBIMO 100	100
DEBIMO 125	125
DEBIMO 160	160
DEBIMO 200	200
DEBIMO 250	250
DEBIMO 315	315
DEBIMO 400	400
DEBIMO 500	500
DEBIMO 630	630
DEBIMO 800	800
DEBIMO 1000	1000
DEBIMO 1500	1500
DEBIMO 2000	2000
DEBIMO 2500	2500
DEBIMO 3000	3000

Special dimension on demand (from 100 to 3000 mm).

• Features

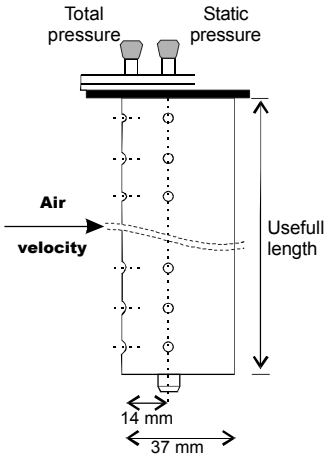

Side view

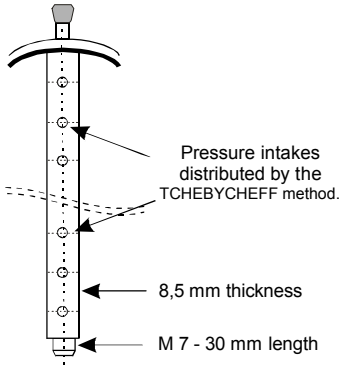

Front view

• Fixing details

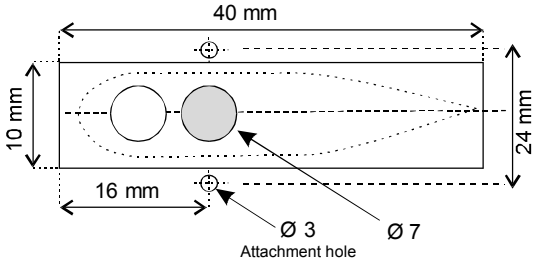

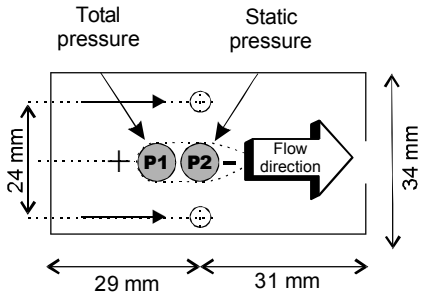

Operation

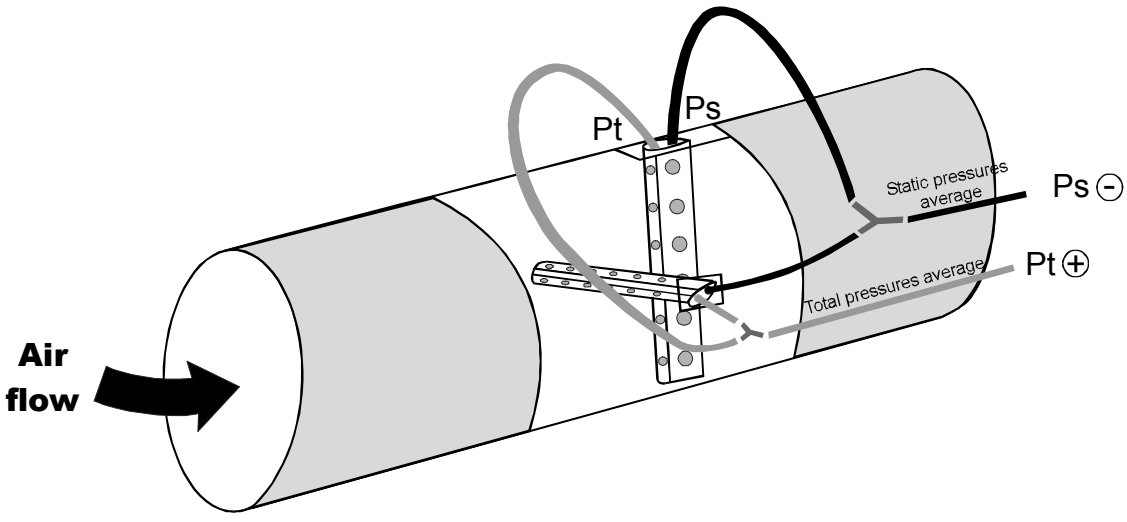

• Calculation formula

Velocity (m/s)* = K_L x $\sqrt{\text{Pt-Ps}}$
with Pt and Ps in Pa

Air flow (m^3/h)* = K_L x $\sqrt{\text{Pd}}$ x S x 3600
with Pd in Pa and S in m^2

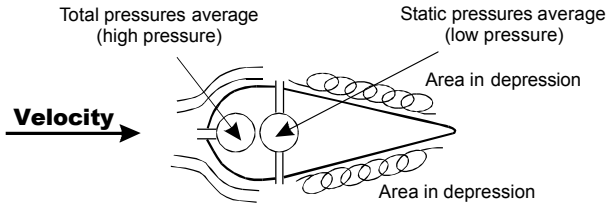

K_L : DEBIMO blade factor
Pt : total pressure
Ps : static pressure
S : duct section (m2)
Pd = Pt - Ps = dynamic pressure
Factor of velocity calculation K_L = 1

* Theoretical, with the specific weight of the air 1,2Kg /

• Mounting examples

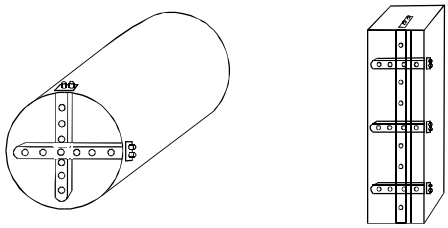

Air flow measurement

Great care should be given to the choice of differential pressure measuring instrument as it is chiefly this instrument that will determine the accuracy of the air flow measurement.
KIMO is a specialist manufacturer of very low pressure instruments and is able to offer a wide choice of suitable instruments including liquid column manometers, analog and electronic indicators, transmitters and pressure switches.

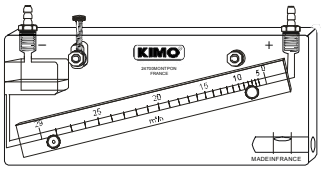

Monitoring, direct indication of flow (volume).

MG inclined liquid column manometer
with scale in m^3/h

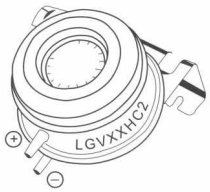

Alarm or control, signal at a pre-set flow.

Differential pressure switch
very low pressure



Record, analyse, control.

Differential low pressure transmitter
CP300 / SQR



Direct indication, alarm or control, record or analyse.

Differential low pressure sensor
transmitter with digital display
CP300 / SQR

Technical characteristics

Materials : extruded aluminium, galvanized steel fixing bracket, stainless steel screws.

Operating temperature : 100°C (maximum 210°C on demand).

Maximum pressure : 2 bars static (check with care the sensor used).

Repeatability : better than 0,3%.

Accuracy : from 3 to 5% depending on the installation* (**).

* Accuracy depends on the very low differential pressure device used.
The blade factor (K_L) is theoretical, and the final measure depends on the duckwork installation.
(elbow, restriction, T, generating turbulences.).

** KIMO recommends that after installation a site measurement is made, with an accurate anemometer, and the differential pressure device adjusted to the real flow value.

Installation advice

Thegreater the length of straight unobstructed duct before the DEBIMO blades thegreater the accuracy.

- **Necessary minimum straight length**

Circular duct

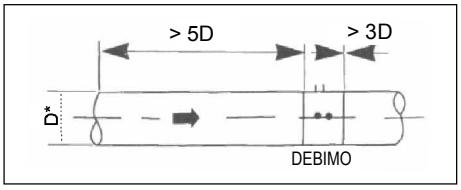

Following NF ISO 7194.

Mounting of a DEBIMO measuring system in a horizontal duct.
Before the DEBIMO, safety distance : 5 x D*
After the DEBIMO, safety distance : 3 x D*
*D = duct diameter in m.

Rectangular duct

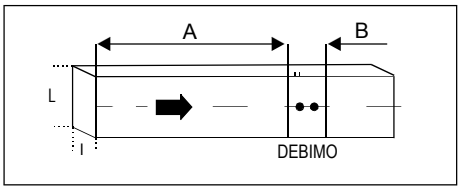

Following NF ISO 7194.

Mounting of a DEBIMO measuring system in a horizontal duct.
Before DEBIMO, safety distance :

$$A > 5 \times \sqrt{\frac{4 \times L \times l}{\pi}}^{*}$$

After DEBIMO, safety distance :

$$B > 3 \times \sqrt{\frac{4 \times L \times l}{\pi}}^{*}$$

* with L and l in m (length and width of duct).

Options and accessories

- Anodic oxidising for harsh environments.
- **TC 5 x 8** : Clear tube 5 x 8 mm.
- **555 F/F** : Female / female isolating ball valve.
- **J.Y.C** : 10 units bag of Y- connection for Ø 5 x 8 tube.
- **J.T.C** : 10 units bag of T- connection for Ø 5 x 8 tube.

Ref. FT Ang - Débimo - 11/06 D

www.kimo.fr

EXPORT DEPARTMENT
Tel : + 33. 1. 60. 06. 69. 25 - Fax : + 33. 1. 60. 06. 69. 29
e-mail : export@kimo.fr

Distributed by :

QControl quality solutions
info@qcontrol.gr www.qcontrol.gr
ΤΗΛ. 210 9416 200 FAX. 210 9415 211
Κοραή 38 183 45 Μοσχάτο